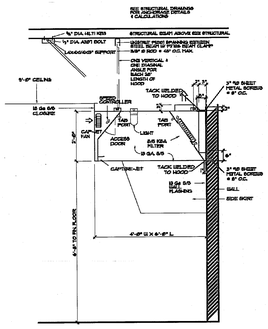


VENTILATOR (HOOD), ITEM #3

DETAIL A

NO SCALE

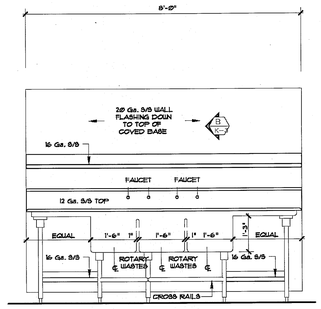


SINK UNIT, POT WASHING, ITEM #14

ELEVATION 1 / K-3

1/2"=1'-0"

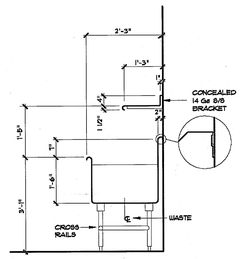


SINK UNIT, POT WASHING, ITEM #14

DETAIL B

1/2"=1'-0"

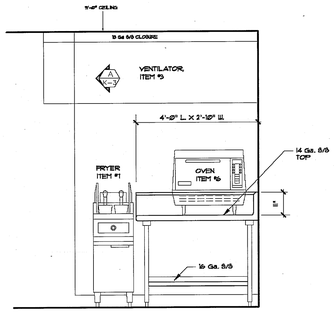


COUNTER, ITEM #5

ELEVATION 2 / K-3

1/2"=1'-0"

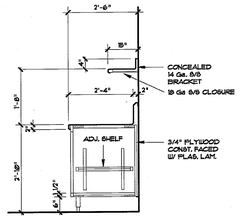


COUNTER, SERVICE, ITEM #15

DETAIL C

1/2"=1'-0"

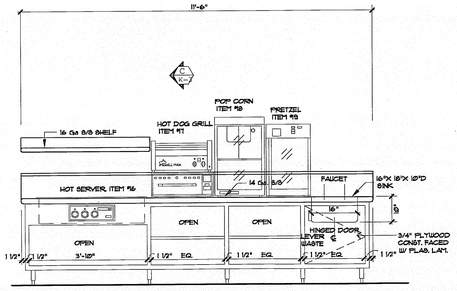


COUNTER, SERVICE, ITEM #15

ELEVATION 3 / K-3

1/2"=1'-0"

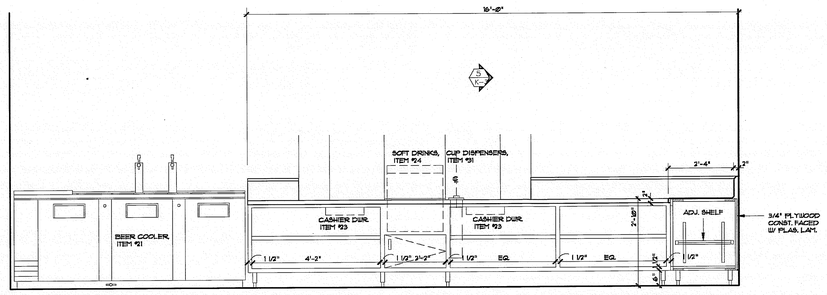


COUNTER, SERVING, ITEM #22

ELEVATION 4 / K-3

1/2"=1'-0"

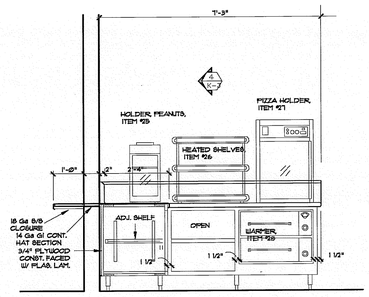


COUNTER, SERVING, ITEM #22

ELEVATION 5 / K-3

1/2"=1'-0"

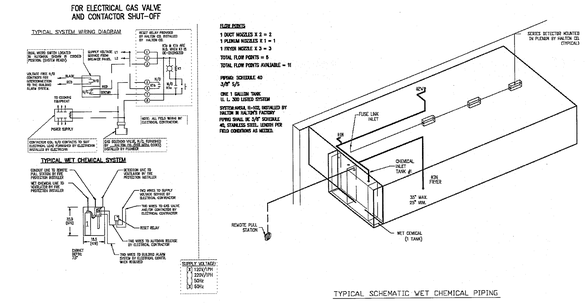


TYPICAL SCHEMATIC WET CHEMICAL PIPING

FIRE SUPPRESSION SYSTEM, ITEM #4

DETAIL X

NO SCALE

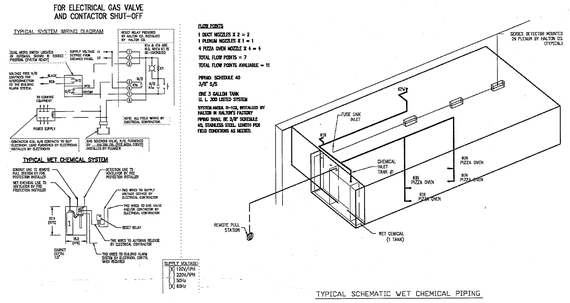


TYPICAL SCHEMATIC WET CHEMICAL PIPING

FIRE SUPPRESSION SYSTEM, ITEM #20b

DETAIL X

NO SCALE

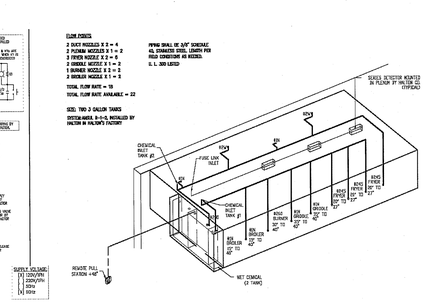


TYPICAL SCHEMATIC WET CHEMICAL PIPING

FIRE SUPPRESSION SYSTEM, ITEM #33b

DETAIL X

NO SCALE


MIG

MOORE IACOFANO GOLTSMAN, INC.

801 N. HARBOR BLVD.
FULLERTON, CA 92831

TEL. 714/871-3638
FAX 714/871-1188
www.migcom.com

PITASSI ARCHITECTS, INC.

8439 White Oak Ave., Suite. 105
Rancho Cucamonga, Ca 91730
Tel. 909-980-1361 ▪ Fax. 909-944-5814
e-mail. pjpala@pitassiarchitects.com

CONSULTANT:

Commercial Kitchen Design, Inc.
FOOD FACILITIES CONSULTANTS ©

624 STARLIGHT CREST DRIVE
LA CANADA - FLINTRIDGE CA 91011
(818) 790-8494, FAX (818) 952-8025


Copyright, All Rights Reserved, 2009

PERRIS VALLEY Big League Dreams

2155 Trumble Road
Perris, California 92570

SHEET TITLE

FOOD SERVICE
EQUIPMENT DETAILS
CONCESSION STAND
STADIUM CLUB

100% CONSTRUCTION DOCUMENT

| DATE | REVISIONS |
|---|---|
| | |

STAMP

LICENSED ARCHITECT
PETER J. PITASSI
C-11446
EXP.
STATE OF CALIFORNIA

| CHECKED BY | DATE |
|---|---|
| wjw | 07-06-09 |
| DATE 01-07-10 | FILE NAME |
| DRAWN BY wjw | SHEET K-3-CS |
| JOB NO. 05208.00 | |
| SCALE as noted | |